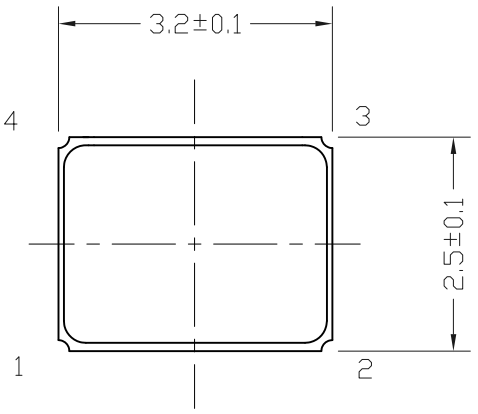

TOP VIEW

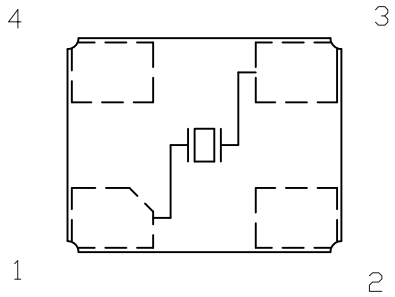

INTERNAL CONNECTION

REMARK: 1,3 -CRYSTAL
2,4 - GND

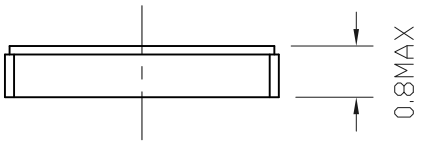

FRONT VIEW

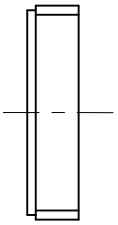

SIDE VIEW

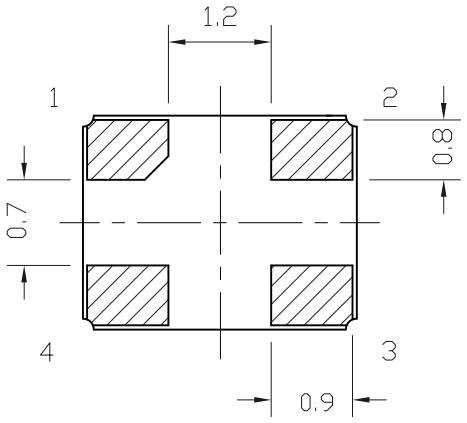

BOTTOM VIEW

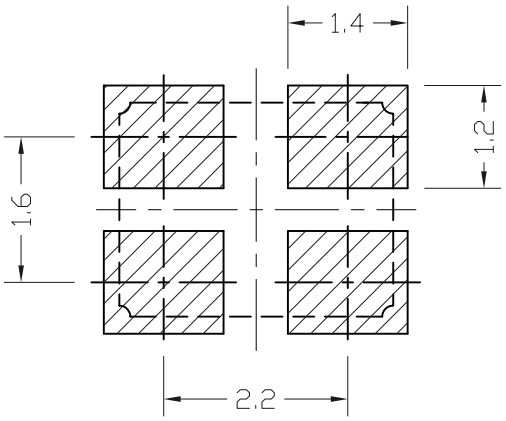

RECOMMENDED LAND PATTERN

MARKING INFORMATION

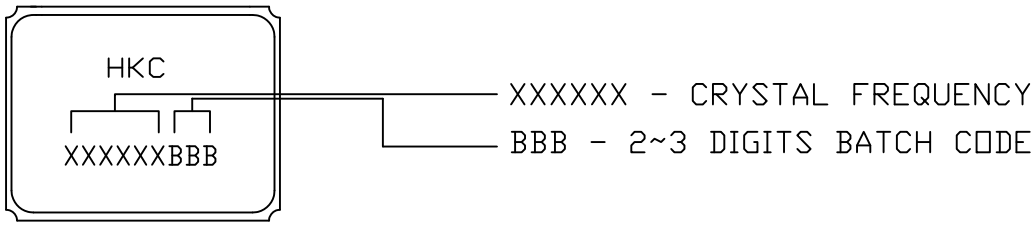

Note: #2 & #4 are connected with the cover

		DIMENSION AND DETAILS					
ITEM	QTY.	DESCRIPTION	MAT'L	HDN.	SURFACE	MAT'L SIZE	REMARK

GENERAL TOLERANCE:
.X=±0.1 .XX=±0.05

	DATE	NAME
DRAWN	26-02-10	Deng
CHECK	26-02-10	Hong
APROV.	26-02-10	

TITLE : 3.2x2.5 CERAMIC SMD CRYSTAL

PROPRIETARY NOTICE : THIS DRAWINGS AND SPECIFICATIONS ARE THE PROPERTY OF HKC.

HONG KONG X'TALS LTD.

PART No.: C7

DRAWING No.: 12040161

DO NOT SCALE DRAWING

ALL DIMENSIONS IN mm UNLESS OTHERWISE STATED

SCALE: NA | SHT. 1 OF 1 | REV. 02

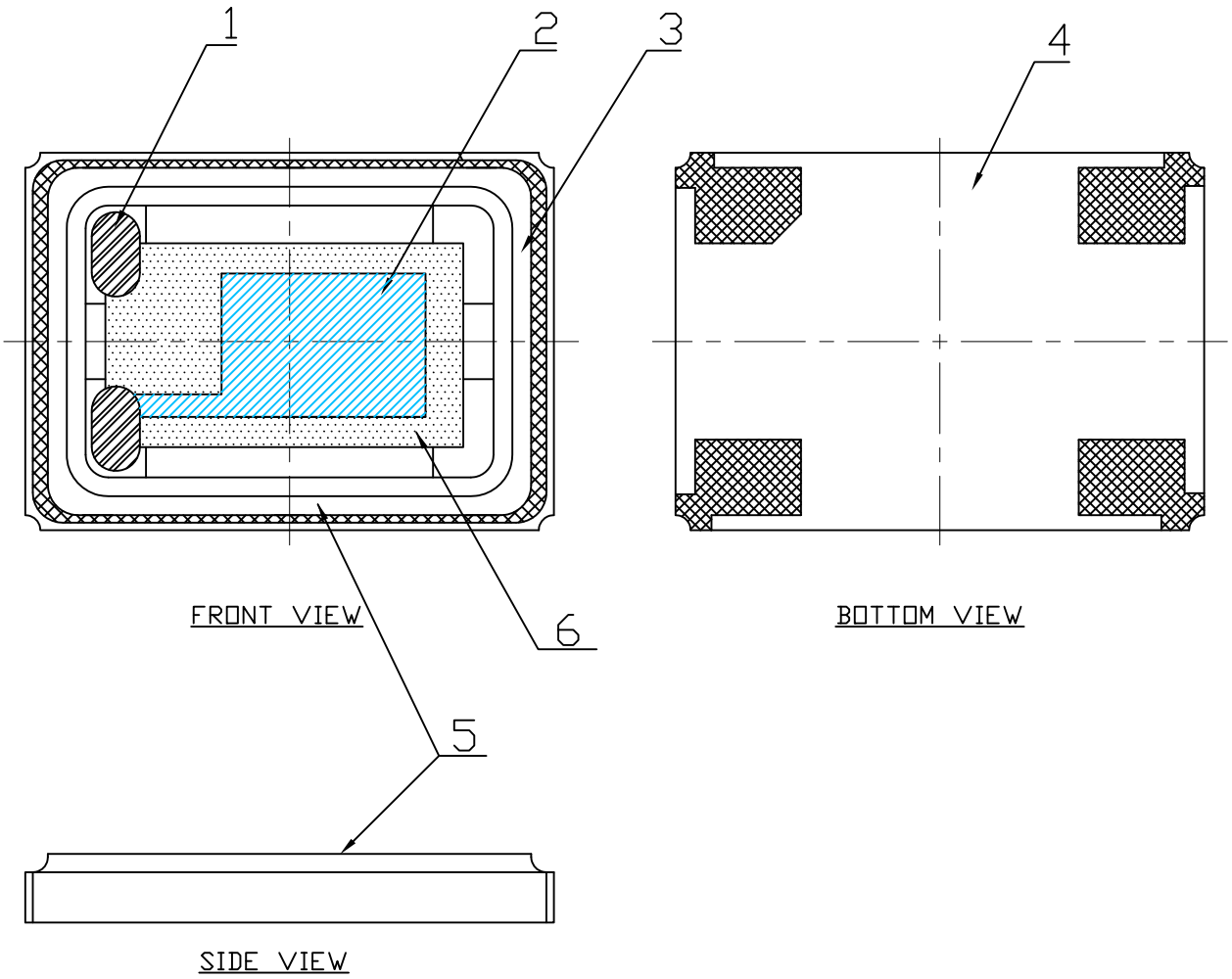

ITEM	DESCRIPTION	MATERIAL
1	CONDUCTIVE BONDING	EPOXY
2	ELECTRODE	Ag
3	EDGE	Ag-Cu Alloy
4	SUBSTRATE	CERAMIC
5	COVER (LID)	Fe-Ni-Co Alloy
6	BLANK	SYNTHETIC QUARTZ

INTERNAL STRUCTURE

ITEM	QTY.	DESCRIPTION	MAT'L	HDN.	SURFACE	MAT'L SIZE	REMARK

GENERAL TOLERANCE:
X= ±0.5 X°= ±0.5°
.X= ±0.1 .X°= ±0.1°
.XX= ±0.05 .XX°= ±0.05°

	DATE	NAME
DRAWN	16-03-10	Deng
CHECK	16-03-10	Hong
APROV.	16-03-10	

TITLE : CERAMIC SMD TYPE CRYSTAL(4PADS) CROSS SECTION

PART No.: C1 C3 C5 C7 CA

DRAWING No.: 12037956

PROPRIETARY NOTICE : THIS DRAWINGS AND SPECIFICATIONS ARE THE PROPERTY OF KOLINKER

HONG KONG X'TALS LTD.

DO NOT SCALE DRAWING

ALL DIMENSIONS IN mm UNLESS OTHERWISE STATED

SCALE:NA SHT. 1 OF 1 REV. 01

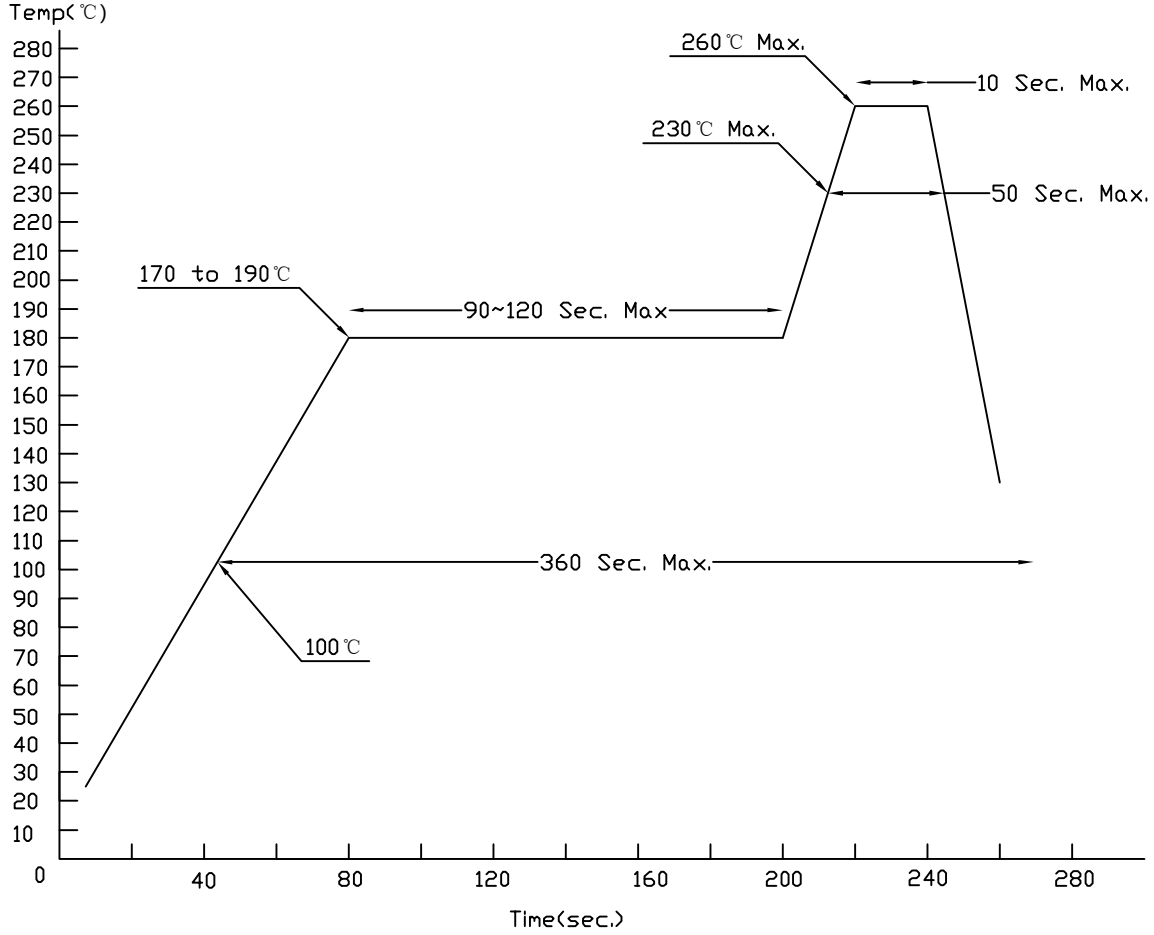

Note:

1. Lead Free or RoHS Compliance
2. Ramp up rate (from 217℃ to 260℃): 3℃/Sec. Max.
3. Ramp down rate: 4℃/Sec. Max.
4. Recommended reflow times: 2 times Max.
5. Effective products:
   - AT cut SMD type crystals including 49US SMD Cyrstal, Ceramic SMD Crystal, Glass Frit Crystal etc.
   - AT cut SMD type oscillatiors including crystal oscillator, VCXO, TCXO, OCXO etc.
6. High temperature type SMD tuning fork crystal

	NOTE						
ITEM	QTY.	DESCRIPTION	MAT'L	HDN.	SURFACE	MAT'L SIZE	REMARK

GENERAL TOLERANCE:
X=±0.5 X°=±0.5°
.X=±0.1 .X°=±0.1°
.XX=±0.05 .XX°=±0.05°

	DATE	NAME
DRAWN	11-06-2013	TAN
CHECK	11-06-2013	PANG
APROV.	11-06-2013	

TITLE : Product Reflow Profile

PART No.: Refer to DWG Decsription

DRAWING No.: 13000002

PROPRIETARY NOTICE : THIS DRAWINGS AND SPECIFICATIONS ARE THE PROPERTY OF HKC.

HONG KONG X'TALS LTD.

DO NOT SCALE DRAWING

ALL DIMENSIONS IN mm UNLESS OTHERWISE STATED

SCALE: NA SHT. 1 OF 1 REV.02